Investigation of Oil Supply System of a ScrollCompressor

[#1]Pavan Jorwekar, [#2]Dr. VirendraBhojwani

[#1]Heat Power, JayawantraoSawant College Of Engineer, Handewadi Road, Hadapsar, Pune -28
[#2]Professor, Heat Power, JayawantraoSawant College Of Engineer, Handewadi Road, Hadapsar, Pune -28

ABSTRACT— Reliability of hermetically sealed compressor depends upon how well it's lubrication system performs. In actual condition it's very difficult to measure the oil flow rate inside the compressor. This paper elaborate the method of using numerical simulation to estimate the flow rate at various operating conditions.

Keywords— Hermetic Compressor, Lubrication, CFD, Oil Pump**.**

I. INTRODUCTION

Major parts in scroll compressor are motor, a shaft, fixed and orbiting scrolls, and main & lower frames that support the shaft. It is betterin comparison with rotary and reciprocating type compressors in efficiency, reliability, NVH due to its constructional advantages. However, as the compression mechanism is located at top, it is very difficult to supply oil at those locations. So it is much more important to supply oil properly to these parts in term of reliability. Oil plays important roles in the compressors, such as the prevention of gas leakage at the compression chamber, supply adequate quantity of oil to bearings to prevent compressor seizer and the cooling of the rotating parts heated by friction heat. If oil is oversupplied to the lubricating parts, the oil discharged into cycle increases. The poor supply of oil results in the temperature rise of bearings. So it is required to design the optimum oil supply system to guarantee high reliability and efficiency of scroll compressors.
Most previous analytical studies on the oil supplying mechanism have conducted for a constant speed scroll compressor with anconsidering single-phase flow. Also, many studies about the oil supply system of scroll compressors have been done, but only few take the whole system as an object of analysis. The objective of this work is to predict the oil flow pattern of fixed speed compressor using a CFD simulation method and prove it experimentally.
Once the method is established, it can be used to calculate the oil flow rate of compressor at various operating conditions using numerical methods which earlier was not possible using experimental methods.

Scroll Compressor Lubrication System

Scroll compressor use centrifugal force-driven oil pump that distributes lubricant to the bearings and drive coupling through a diagonal channel drilled in the motor shaft, as shown in Fig. 1

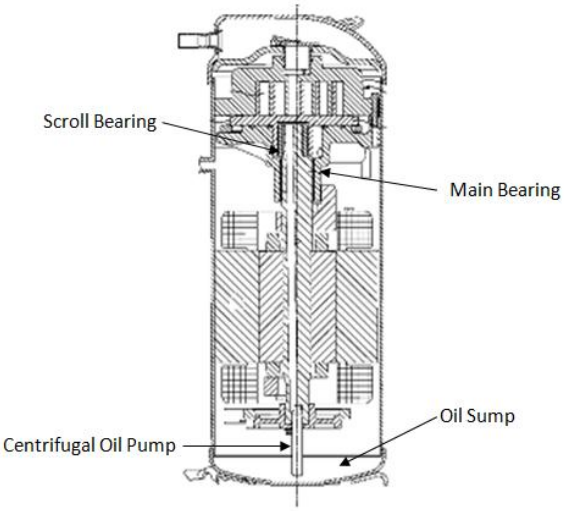

Fig.1Typical lubrication system in scroll compressor

A typical Lubrication system consists of several elements including oil pump, galleries and bearing etc. Fig.1 shows a schematic diagram of a scroll compressor lubrication system.

Oil is transported to the bearings through oil feed holes, shown in Fig. 1. Scroll bearing feed hole is given for scroll bearing and Main bearing feed hole is given for main bearing lubrication. Vent is provided to prevent the pump from loose its prime & ensures continuous supply of oil to bearings.

Computational Model Setup

The baseline design of oil pump has been taken for computational model setup. Here fluid volume is extracted in ANSYS DESIGN MODULAR 14.0 as per the scope defined for project is shown in Fig 2. To simplify the analysis of the oil gallery, the following assumptions are made in the present model: (1)there is no phase change in the oil, (2)the oil is in incompressible laminar flow, (3) the heat transfer between oil and air is negligible, and (4) the properties of a working fluid inside of a control volume are constant. The VOF (volume of fluid) multiphase model was used to analyze two-phase mixture of oil and air in the oil gallery. The model is divided in 3 domains; (a) stationary domain represents stationary oil sump, (b) rotating shaft with flinger represents volume of oil filled in the oil gallery during non-running condition, and (c) rotating shaft with 3 outlets represents the volume of air present in oil gallery

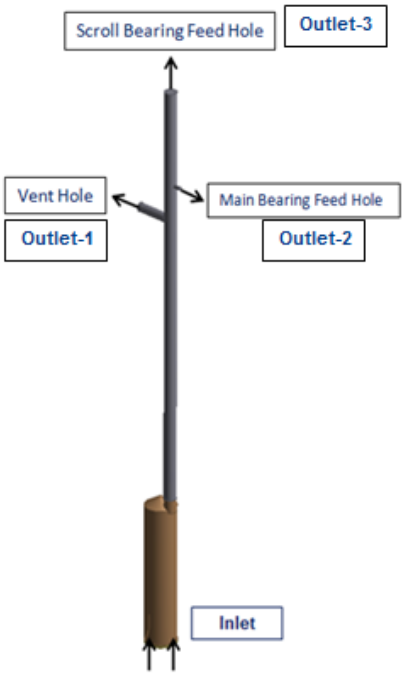

Fig.2Model setup

Boundary Conditions

Looking to the physics of the flow, following boundary conditions were considered to be appropriate:

- Shaft inlet pressure = 0.102 N/mm^2
- Shaft outlet pressure = 0.101 N/mm^2
- Shaft speed = 3550 rpm/2900 rpm
- **Polyol ester oil properties at 35°C:**
- Density = 952 Kg/m^3
- Viscosity = 0.0335 N.s/m^2
- Specific Heat = 0.389 Cal/g.°C
- **Polyol ester oil properties at 43.3°C:**
- Density = 952 Kg/m^3
- Viscosity = 0.0249 N.s/m^2
- Specific Heat = 0.392 Cal/g.°C

- **Air properties at 30°C:**
- Density = 1.165 Kg/m^3
- Viscosity = 0.000019 N.s/m^2
- Thermal Conductivity = 0.0266 W/mK

Computational Geometry and Grid:

The basic geometry is prepared using unstructured hybrid tetrahedral mesh with mostly tetrahedral elements in the passage. Tetrahedral mesh is suitable for complex geometries. Hex mesh is used for stationary domain.

Meshing divided in 3 domains;
1.Stationary domain, 2. Rotating shaft with oil flinger, and 3.Rotating shaft with 3 outlets.
The basic mesh geometry is as shown in Fig 3.

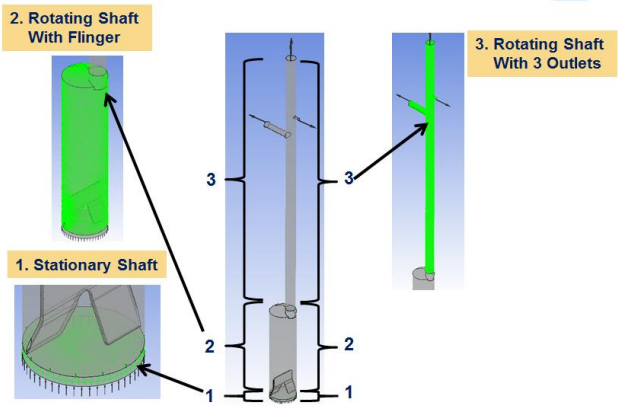

Fig.3Analysis Grid

Grid independence study is carried out for different mesh sizes to find same fundamental solution independent of either grid size or scale factor and retain consistency across varying cell sizes. In this section we look at the four runs of the same boundary conditions and solution scheme but on different grid sizes. The basic geometry is prepared using the tetrahedral mesh for rotating shaft with 3 outlets and flinger, hex mesh for stationary shaft. Following four cases at 3550 rpm and 35°C were run for grid independence study;

1. Grid size of 2.0 mm,
2. Grid size of 1.5 mm,
3. Grid size of 1.0 mm, and
4. Grid size of 0.8 mm.

Table 1Mass Flow Rates for different grid

Case setup	Grid Size (mm)	Total No. of Nodes	Total No. of Elements	Mass flow rate in (% Change)	
				MB	SB
1	2.0	191225	975950	100	100
2	1.5	194549	998022	104	103
3	1.0	220337	1131420	105	104
4	0.8	260377	1354072	105	105

Table 1 shows consistent outputs (mass flow rates) for grid sizes 1.0 mm and 0.8 mm. Grid size of 0.8 mm is used as optimized grid size to run further cases. The calculated oil mass flow rates and grid size with 1.0 mm is selected for further study

Numerical Simulation Results

Below fig. 4 shows volume fraction, velocity and pressure contours of the cases for which experiments are conducted. The predicted free surface of oil at each cross section is shown. Lower portion of oil pump is filled completely with oil. Oil moves

towards the upper region of oil pump due to an increase in centrifugal force. The oil film thickness reduces with increase in shaft speed. When the shaft speed is high, sufficient amount of oil is fed into the upper section of the oil gallery even though the eccentricity of the oil gallery is small.

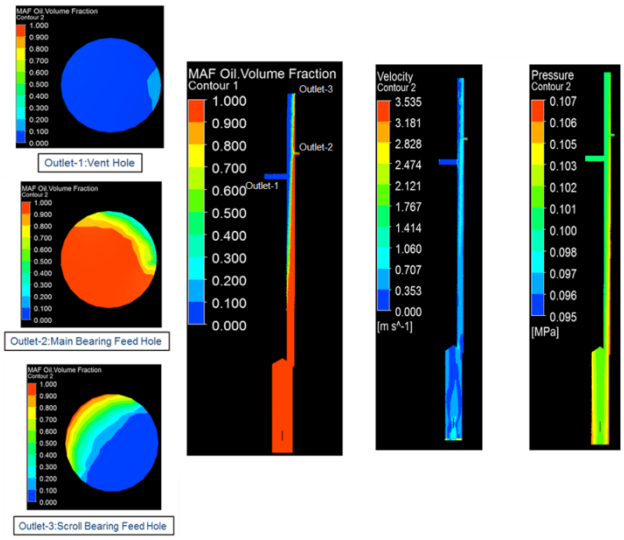

Fig.4Oil volume fraction, velocity and pressure contours at 35°C oil temperature and 3550 rpm shaft speed

Experimental Setup

Fig. 5 shows CAD layout of the test setup used for measurement of oil flow rate through a hole along axial direction. Shaft is designed to have a coupling arrangement at the top to couple with motor (driving) shaft. Flexible type of coupling is used in the set up to accommodate varying degrees of parallel misalignment up to 30 microns. At the lower portion of shaft existing scroll compressor components have been used to restrict axial movement of shaft. Dual frequency motor with the specification 0.5HP, 2 Pole, B5 71 Frame size is used in the setup to rotate shaft at 2900 rpm and 3550 rpm. Oil cup is designed to collect oil from exit ports and deliver it to measuring beaker through flexible pipe. Oil collector and cup is so designed that the splashing of oil during running condition is avoided which helps to make more accurate measurements. Inner portion of oil collector is used like a bearing and supports the shaft to avoid deflection during running condition. L-shaped frame structure is used to support functional parts and dampen the vibration with the help of rubber pads. Shaft center alignment with motor shaft and lower housing is within 20 microns, measured with the help of dial guage indicator. Scroll component assembly and L-shaped frame structure are mounted on the same base to get more accurate shaft alignment position. Thermocouple wire is dipped into the oil bath to measure the oil temperatures at varying speed. Development of test setup to measure oil flow rate through rotating shaft is challenging and hence gone through several changes in the set up till we get the better setup as explained above.

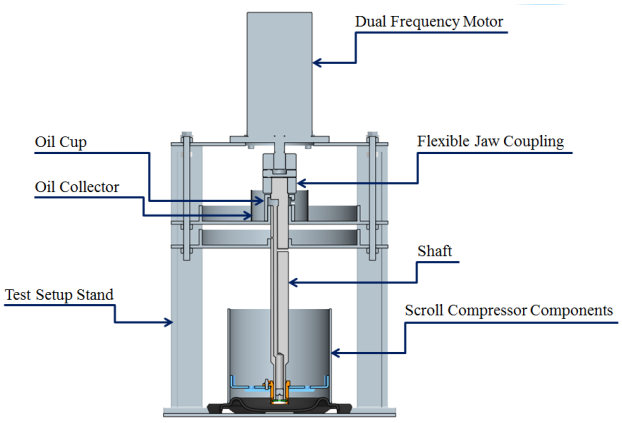

Fig.5CAD layout of the test setup used for the measurement of oil flow rate through a hole along axial direction.

Following Table 2 shows the comparison between simulation result and experimental result with variation in shaft speed and oil temperature.

Table 2Mass Flow Rates Variation

Case setup	Oil Temp. (°C)	Shaft speed (rpm)	Mass flow rates	
			SB	MB
1	35	3550	9.1	2.8
2	43.3	3550	10.8	7.0
3	35	2900	13.6	10.2
4	43.3	2900	7.7	11.1

II. CONCLUSIONS

The mass flow rate of the oil supplying system for scroll compressor application was measured experimentally and compared the results using the commercial CFD software. Both experimental and simulation work were performed with a variation of oil temperature and shaft speed. The predicted results were consistent with the test data with a maximum deviation of 13.6% at scroll bearing feed hole and 11.1% at main bearing feed hole.

This work will be used in understanding effect of various parameters such as operating conditions, oil and refrigerant miscibility of lubrication system performance.

III. REFERENCES

Alves, Marcus V.C.,(2012), Analytical and CFD Modeling of the fluid flow in an eccentric-tube centrifugal oil pump for Hermetic compressors, *Proceedings of International Compressor Engineering Conference at Purdue* , 1127

ARI 1998.Standard 550/590, Water chilling packages using the vapour compression cycle.*Air-Conditioning and Refrigeration Institute, Arlington, VA*

Bernardi, J., (2000), CFD simulation of a scroll compressor oil pumping system, *Proceedings of International Compressor Engineering Conference at Purdue*, pp. 707-713.

Kim, D.H., Shin C.J., D.K., Cho, S.O., (1998), *An experimental analysis on the oil flow rate in scroll compressors*, Proceedings of International Compressor Engineering Conference at Purdue, 637-642.

Kim, H.J., Kim, J.H., Kim, M.K., (1996), *An analytical study on the performance of the oil supply system for a variable speed scroll compressor*, Proceedings of the SAREK, pp. 215-222.

Luck Mann Antonio J., Alves Marcus Vinicius C., Barbosa Jader R., (2009), *Analysis of oil pumping in a reciprocating compressor*, Applied Thermal Engineering 29, 3118-3123

Cuevas Cristian, Lebrun Jean, Lemort Vincent, Winandy Eric., (2010), *Characterization of a scroll compressor under extended operating conditions*, Applied Thermal Engineering 30, 605-615.

